# Wiring Diagram

## CS-A181KE / CU-A181KE
## CS-A241KE / CU-A241KE

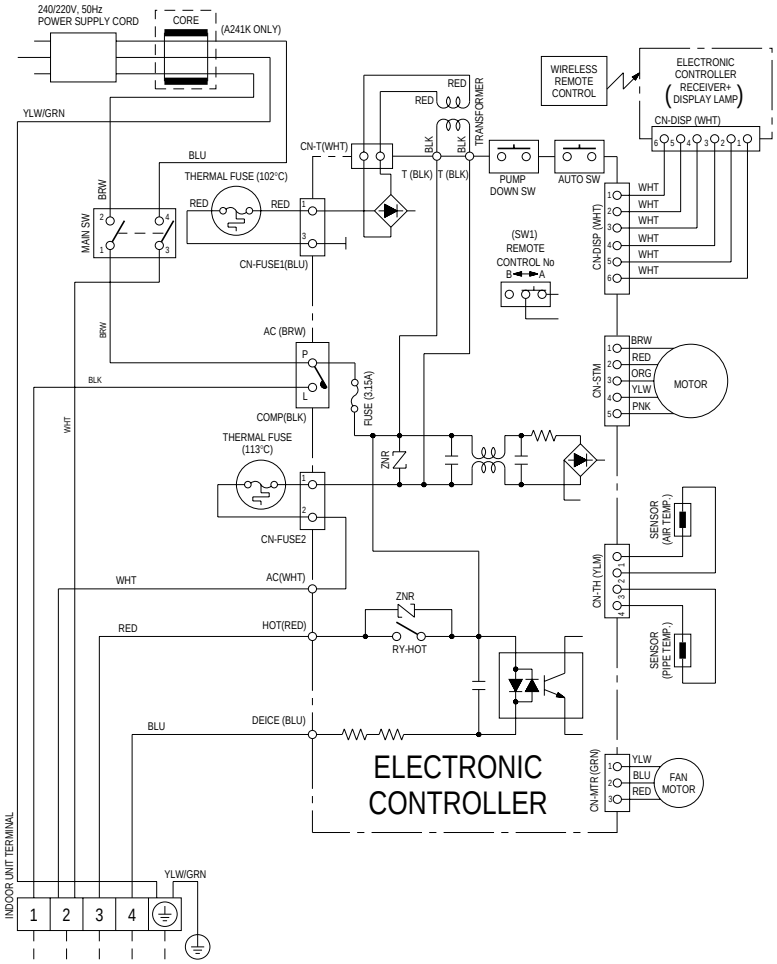


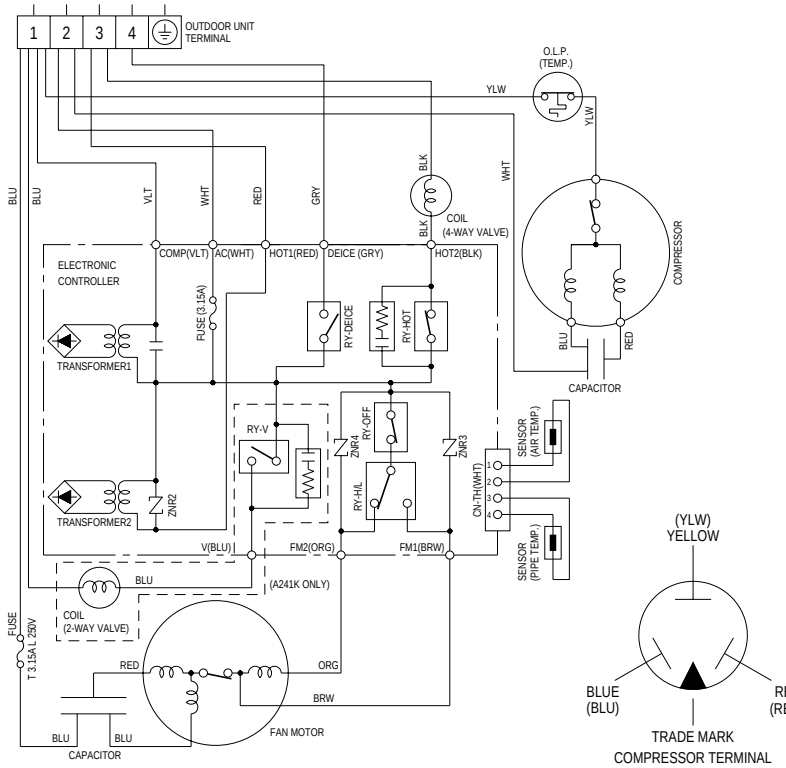


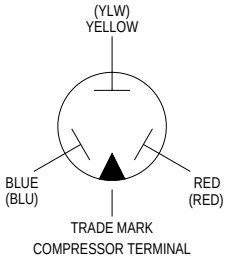


**REMARKS:**

| | | |
|---|---|---|
| BLU | : | BLUE |
| BRW | : | BROWN |
| BLK | : | BLACK |
| WHT | : | WHITE |
| RED | : | RED |
| ORG | : | ORANGE |
| PNK | : | PINK |
| YLW | : | YELLOW |
| GRN | : | GREEN |
| GRY | : | GRAY |
| VLT | : | VIOLET |

### Resistance of Outdoor Fan Motor Windings

| | CU-A181KE | CU-A241KE |
|---|---|---|
| CONNECTION | CWA92294 (Ω) | CWA92295 (Ω) |
| BLUE - BROWN | 79.5 | 46.8 |
| BROWN - ORANGE | 65.1 | 64.6 |
| RED - BROWN | 70.8 | 73.7 |

### Resistance of Compressor Windings

| | CU-A181KE | CU-A241KE |
|---|---|---|
| CONNECTION | 2JS350D3AA02 (Ω) | 2JS464D3AA02 (Ω) |
| C-R | 0.980 | 0.888 |
| C-S | 3.929 | 2.328 |